LONG SEAMS

COURSE	ORIENTATION	ORIENTATION
1(TOP)	70°	354°
2	63°	347°

*VERT – TOP TO BOTTOM

Ship loose items:
NONE

NOTE 7: X-RAY: SPOT X-RAY ON WS AS PER ASME CODE

NOTE: NOZZLE G AND F ARE RADIAL NOZZLES

NOTE: EQUIPMENT NUMBER TO BE STENCILED ON THE SIDE OF THE TANK. 42" FROM THE TOP WELD SEAM WITH 12" TALL LETTERS. ALSO THE SAME IS STENCILED ON MANWAY NECK WITH 4" TALL LETTERS.

***NOTE: ALL ELEVATIONS ARE PULLED FROM WELD SEAM FOR EASE OF FABRICATION**

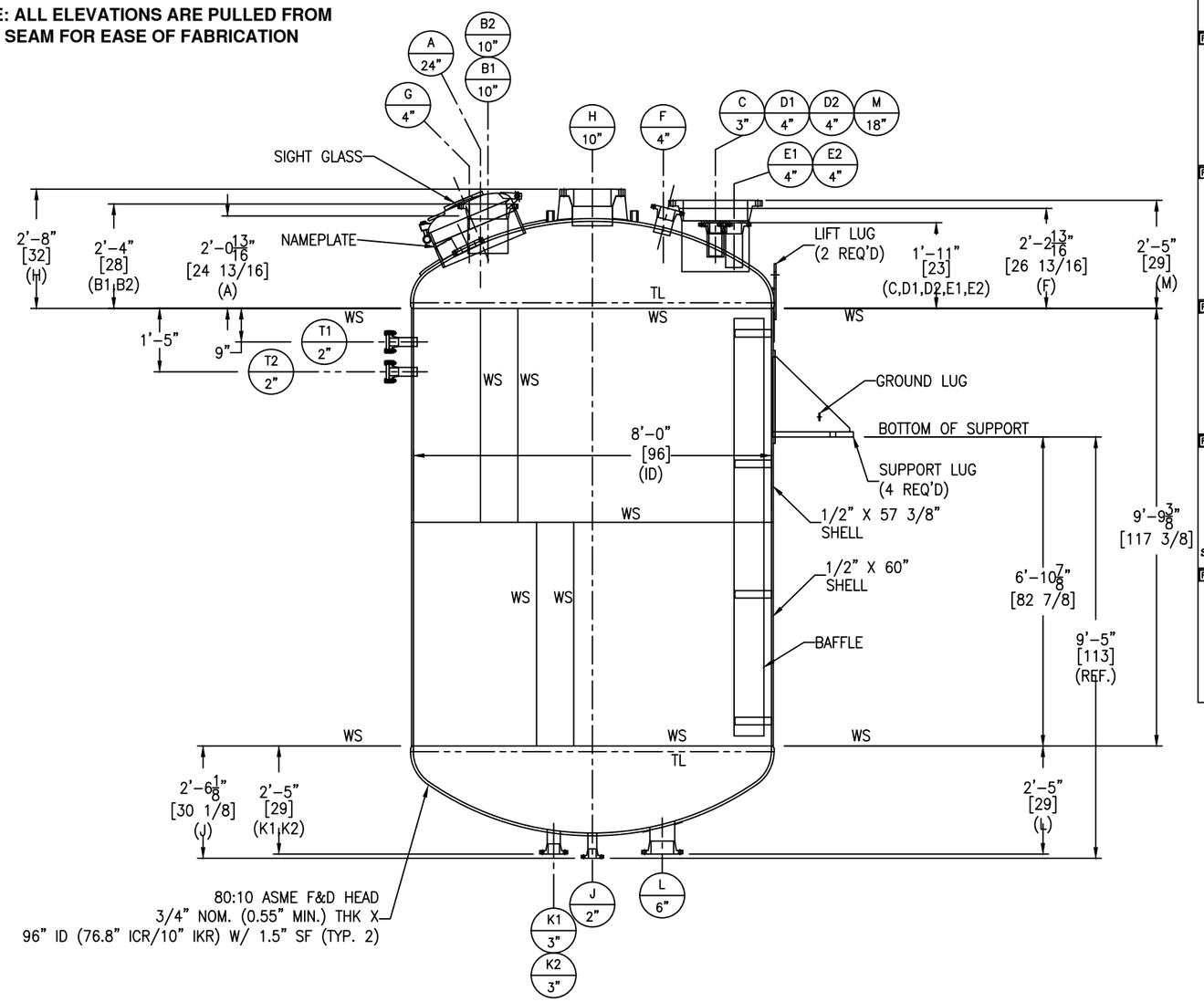

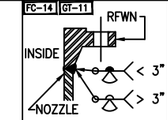

FIGURE NO. 2

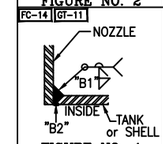

FIGURE NO. 4

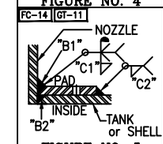

FIGURE NO. 5

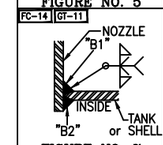

FIGURE NO. 7

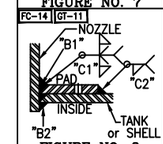

FIGURE NO. 8

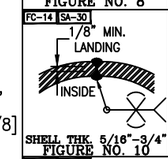

SHELL THK. 5/16"-3/4"
FIGURE NO. 10

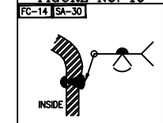

FOR HEADS
FIGURE NO. 11

NOZZLE SCHEDULE

MARK	SERVICE	SIZE	RATING	TYPE / STYLE	NECK SCHED.	PROJECTION EXT. (E)	PROJECTION INT. (MIN.)	WELD FIGURE	REPAD SIZE (WIDTH X THK.)	WELD SIZE "A1"	"A2"	"B1"	"B2"	"C1"	"C2"
A	MANHOLE	24"	–	QUICK OPENING T-BOLT W/ 6" SIGHT GLASS	1/2"	SEE DWG	1"	8	6 3/8" X 5/8"	–	–	3/4	1/8	5/8	3/8
B1	–	10"	150#	RFWN	40S	SEE DWG	1"	2,7	–	–	–	3/8	1/8	–	–
B2	–	10"	150#	RFWN	40S	SEE DWG	1"	2,7	–	–	–	3/8	1/8	–	–
B3	–	10"	150#	RFWN	40S	SEE DWG	1"	2,7	–	–	–	3/8	1/8	–	–
C	–	3"	150#	RFWN	40S	SEE DWG	1"	2,7	–	–	–	1/4	1/8	–	–
D1	–	4"	150#	RFWN	40S	SEE DWG	1"	2,7	–	–	–	1/4	1/8	–	–
D2	–	4"	150#	RFWN	40S	SEE DWG	1"	2,7	–	–	–	1/4	1/8	–	–
E1	–	4"	150#	RFWN	40S	SEE DWG	1"	2,7	–	–	–	1/4	1/8	–	–
E2	–	4"	150#	RFWN	40S	SEE DWG	1"	2,7	–	–	–	1/4	1/8	–	–
F	SPRAYBALL	4"	150#	RFWN	40S	SEE DWG	1"	2,7	–	–	–	1/4	1/8	–	–
G	PROOF LIGHT ASSEMBLY	4"	150#	STUDPAD	–	–	–	4	–	–	–	1/4	1/8	–	–
H	AGITATOR	10"	**300#**	RFWN	40S	SEE DWG	1"	2,8	5" X 3/16"	–	–	3/16	3/16	3/16	3/16
J	BOTTOM OUTLET	2"	150#	RFWN	40S	SEE DWG	–	2,4	–	–	–	3/16	1/8	–	–
K1	THERMOWELL	3"	150#	RFWN	40S	SEE DWG	–	2,4	–	–	–	1/4	1/8	–	–
K2	THERMOWELL	3"	150#	RFWN	40S	SEE DWG	–	2,4	–	–	–	1/4	1/8	–	–
L	–	6"	150#	RFWN	40S	SEE DWG	–	2,5	2" X 3/16"	–	–	3/16	1/8	3/16	3/16
T1	TEST	2"	150#	RFWN W/ BLIND	40S	SEE DWG	–	2,4	–	–	–	3/16	1/8	–	–
T2	TEST	2"	150#	RFWN W/ BLIND	40S	SEE DWG	–	2,4	–	–	–	3/16	1/8	–	–
M	–	18"	150#	RFWN	12"	SEE DWG	1"	2,8	6" X 1/2"	–	–	3/8	1/8	1/2	3/8

MATERIALS OF CONSTRUCTION

	VESSEL
SHELL	SA240-304/304L
HEADS	SA240-304/304L
RIM ANGLE	–
NOZZLE NECKS	SA312-304/304L WLD
NOZZLE FLANGES	SA182F-304/304L
MANWAY NECKS	SA240-304/304L
MANWAY QUICK OPEN ASSEMBLY	SS304/304L
MANWAY GASKET	VITON
GASKETS	GRAPHONIC
BOLTS/STUDS	SA193-B7 (ZINC PLATED)
NUTS	SA194-2H (ZINC PLATED)
REPADS	SA240-304/304L
BOSS	SS304
SUPPORTS/HOLD DOWNS	SA240-304/304L
LIFTING LUGS	SA240-304/304L
SIGHT GLASS ASSEMBLY	SS304/304L
GROUND LUG	SA240-304/304L
BAFFLE/BAFFLE SUPPORTS	SA240-304/304L
LADDER	–
TANK CLIPS (LADDER)	–
HANDRAIL	–
HANDRAIL CLIPS	–
PLATFORM	–
PLATFORM CLIPS	–
DIPTUBE SUPPORT	–
JACKET SHELL	–
JACKET HEADS	–
JACKET NOZZLE NECKS	–
JACKET NOZZLE FLANGES	–

DESIGN DATA

	VESSEL
DESIGN AND FAB. CODE	ASME
CERT. STAMP REQ'D.	YES
DESIGN PRESSURE	150 PSIG/FV
DESIGN TEMPERATURE	320° F
MIN. DESIGN METAL TEMP.	-20° F @ 150 PSIG
OPERATING PRESSURE	ATM
OPERATING TEMPERATURE	AMB
JOINT EFFICIENCY HEADS	0.85
JOINT EFFICIENCY SHELL	0.85
CORROSION ALLOWANCE	0"
SPECIFIC GRAVITY	1.0
EARTHQUAKE ZONE	Ss = (0.13) S1 = (0.053)
WIND LOAD	109 MPH
STRESS RELIEF	NOT REQ'D
RADIOGRAPHIC EXAM	SEE NOTE 7
DYE PENETRANT EXAM	NOT REQ'D
MAGNETIC PARTICLE EXAM	NOT REQ'D
HYDROSTATIC TEST	208 PSIG
PNEUMATIC TEST	NOT REQ'D
JKT DESIGN AND FAB. CODE	–
JKT CERT. STAMP REQ'D.	–
JKT DESIGN PRESSURE	–
JKT DESIGN TEMPERATURE	–
JKT MIN. DESIGN METAL TEMP.	–
JKT OPERATING PRESSURE	–
JKT OPERATING TEMPERATURE	–
JKT JOINT EFFICIENCY HEADS	–
JKT JOINT EFFICIENCY SHELL	–
JKT HYDRO TEST	–

VESSEL FINISH

INTERIOR WELD TREATMENT:	SAV TANK STANDARD
EXTERIOR WELD TREATMENT:	SAV TANK STANDARD
SAV TANK FINISHING STANDARD:	SEE NOTE 6
INSULATION:	N/A
PAINTING:	N/A

VESSEL CAPACITY AND WEIGHTS

OPERATING CAPACITY	4,000 GAL.
FULL CAPACITY	4,600 GAL.
EMPTY SHIPPING WEIGHT	13,800 LBS.
WEIGHT FULL OF WATER	52,400 LBS.
WEIGHT FULL OF PRODUCT	52,400 LBS.

ASME SECT. VIII, DIV. 1
2023 EDITION

ENG. _____ DATE: _____
Q.C. _____ DATE: _____
A.I. _____ DATE: _____

This drawing is issued for customer approval. please review, make approval changes (if any) in red. check the appropriate box, sign & date.

- ☐ Approval – no changes. Please proceed with fabrication.
- ☐ Approved as noted. Please proceed with fabrication
- ☐ Not approved. Please make changes and resubmit.

Customer signature _____ Date _____

GENERAL NOTES

1.) COVER ALL FLANGES, OPENINGS & MACHINED SURFACES PRIOR TO SHIPMENT UNLESS OTHERWISE NOTED.
2.) BOLT HOLES TO STRADDLE 0° & 180° UNLESS OTHERWISE NOTED.
3.) REPADS TO HAVE (1) ø1/4" NPT TELL-TALE HOLES FOR PNEUMATIC TESTING AT 2 PSIG FOR PRESSURE RETAINING PARTS. ALL OTHER REPADS TO HAVE (1) ø1/4" WEEP HOLE AT LOWEST POINT ON PAD.
4.) ASME CODE VESSELS TO BE IN ACCORDANCE WITH UG-80 & UG-81. TOLERANCES: +/- 1/8" FOR DIMENSIONS AND +/- 2 DEGREES FOR ORIENTATIONS.
5.) ASME MATERIALS TO CONFORM TO THE FOLLOWING: FLANGES – B16.5, FITTINGS – B16.9 & COUPLINGS – B16.11.
6.) PICKLE ALL EXTERIOR WELDS. PASSIVATE INTERIOR & EXTERIOR OF VESSEL.
7.) X-RAY: SPOT X-RAY ON WS AS PER ASME CODE.

REVISIONS

REV	D.BY	C.BY	DATE	DESCRIPTION
				AS BUILT
2	RS	NP	2/26/26	CERTIFIED
1	RS	NP	2/11/26	APPROVAL REV 1
0	AD	RS	1/16/25	APPROVAL

Savannah Tank & Equipment Corp.
1517 Telfair Road, Savannah, GA 31415
(912) 233-8902

DRAWN BY: AD
CHK'D BY: RS
APPROVED BY: NP
SCALE: 1/2" = 1'-0"

SYNTHOMER
EMULSION TANK
EQUIP. #T-11-21-02
CUST. PO #4500361508

DRAWING NO.: 356-25-1 SHT 1 OF 4 REV. SET 2

LONG SEAMS

COURSE	ORIENTATION	ORIENTATION
1(TOP)	70°	354°
2	63°	347°

*VERT – TOP TO BOTTOM

Ship loose items:
NONE

⚠1 *NOTE: EQUIPMENT NUMBER TO BE STENCILED ON THE SIDE OF THE TANK. 42" FROM THE TOP WELD SEAM WITH 12" TALL LETTERS. ALSO THE SAME IS STENCILED ON MANWAY NECK WITH 4" TALL LETTERS.

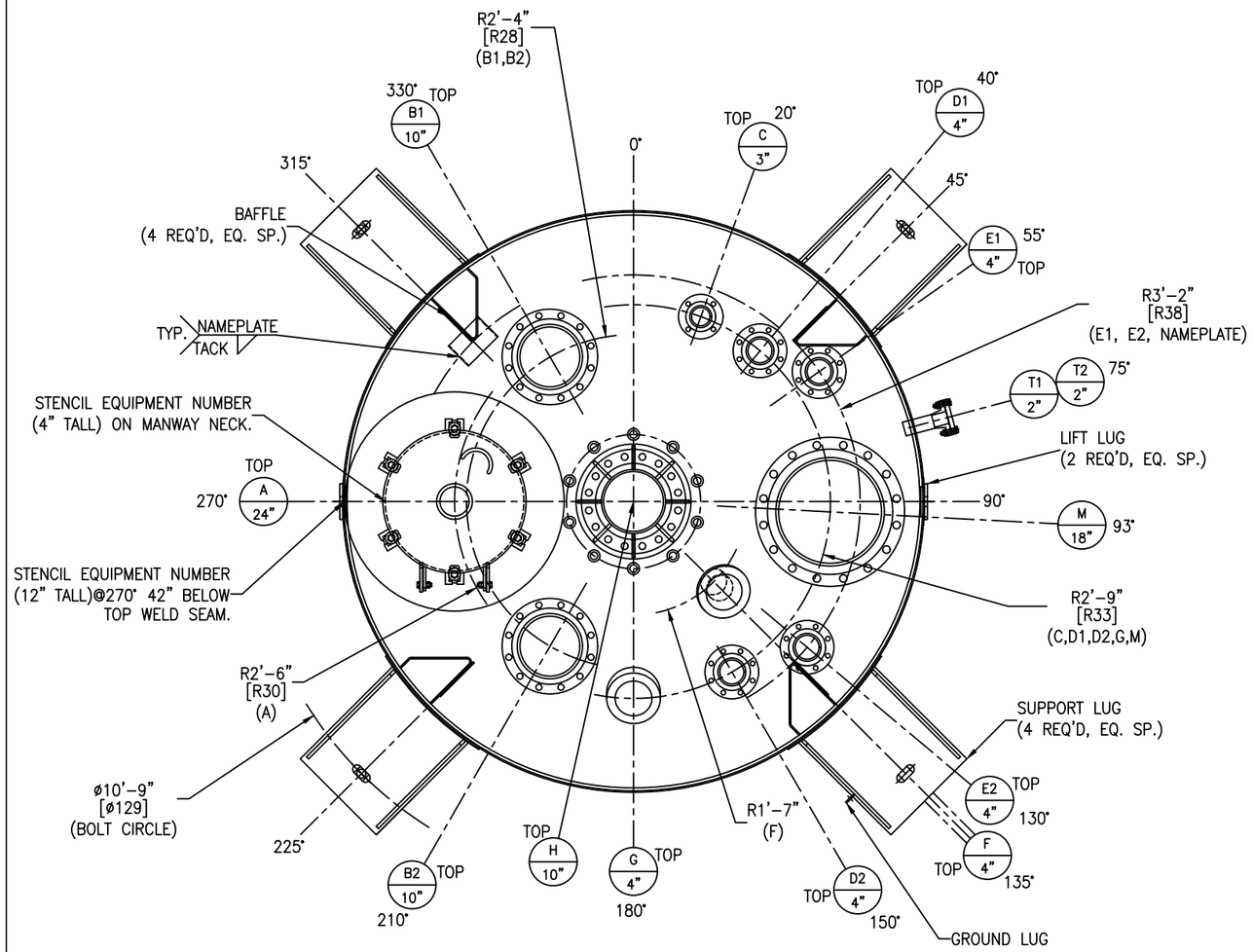

PLAN VIEW

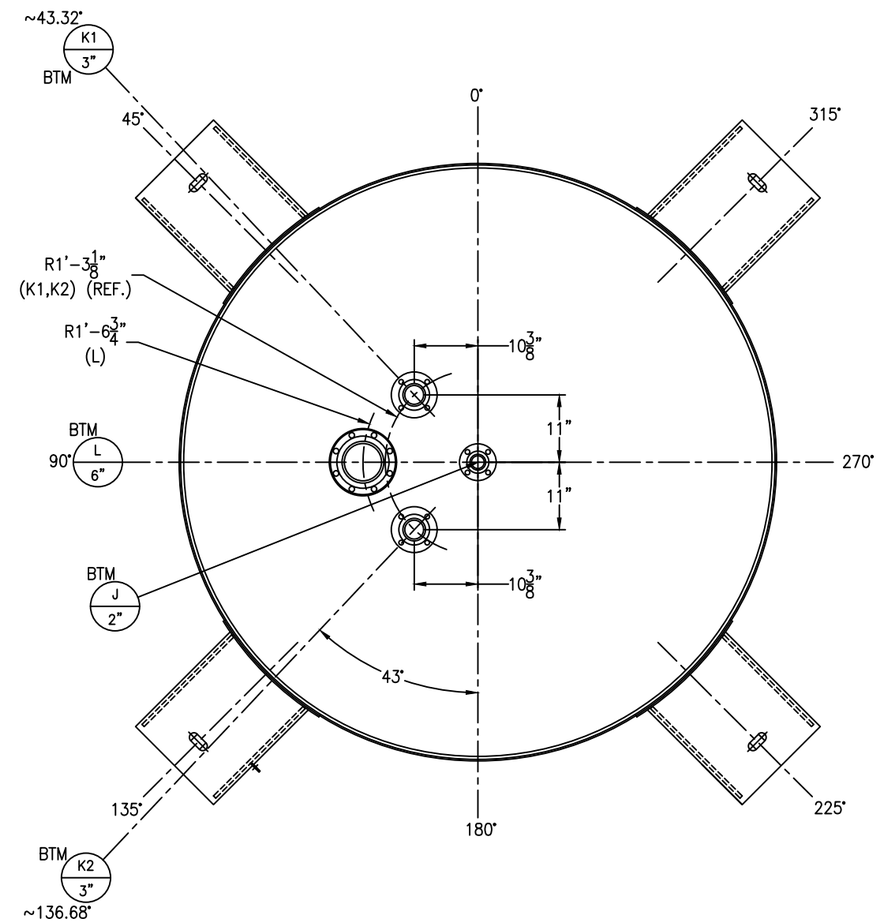

BOTTOM VIEW

REV	D.BY	C.BY	DATE	DESCRIPTION
				AS BUILT
2	RS	NP	2/26/26	CERTIFIED
1	RS	NP	2/11/26	APPROVAL REV 1
0	AD	RS	1/16/25	APPROVAL

⚠1 REVISIONS

Savannah Tank & Equipment Corp.
1517 Telfair Road, Savannah, GA 31415
(912) 233–8902

DRAWN BY: AD
CHK'D BY: RS
APPROVED BY: NP
SCALE: 3/4" = 1'–0"

SYNTHOMER
EMULSION TANK
EQUIP. #T–11–21–02
CUST. PO #4500361508

DRAWING NO.: 356–25–2 SHT 2 OF 4 REV. SET 2

FC-14

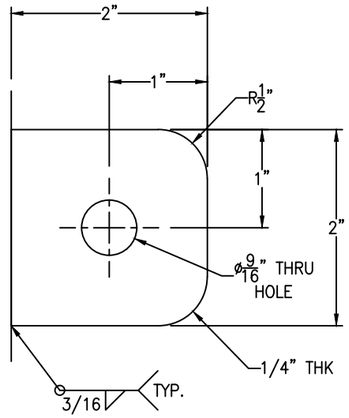

GROUND LUG IS LOCATED @ 135°

GROUND LUG DETAIL

(1 REQ'D) SCALE: 1'-0" = 1'-0"

FC-14

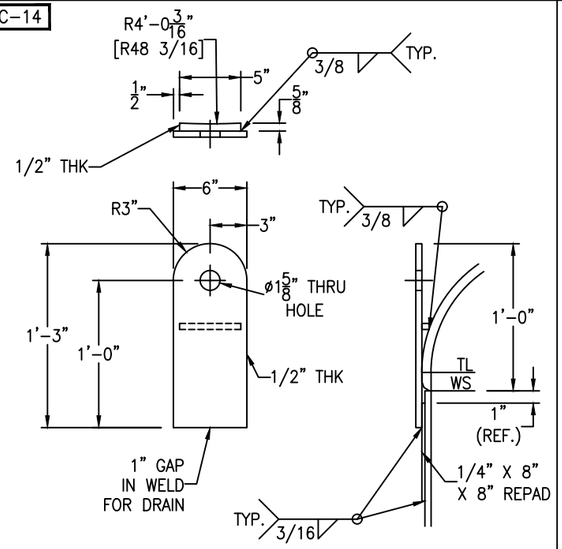

TANK <= 20000#
SHACKLE SIZE = 1 1/2"

LIFT LUG DETAIL

(2 REQ'D) SCALE: 1 1/2" = 1'-0"

FC-14

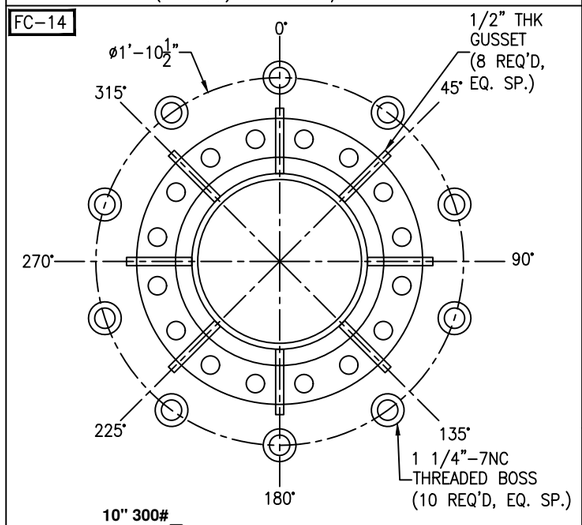

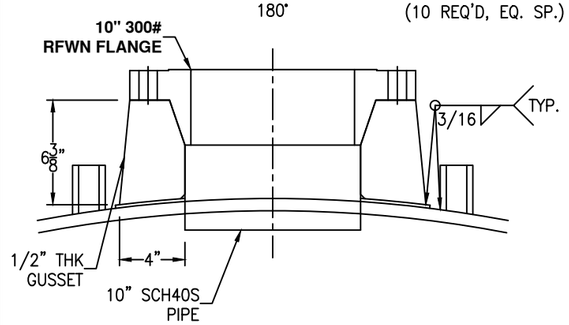

BOSS LOCATED AT: 0°, 36°,72°,108°,144°,180°, 216°,252°,288° & 324°.

NOZZLE H DETAIL

SCALE: 2" = 1'-0"

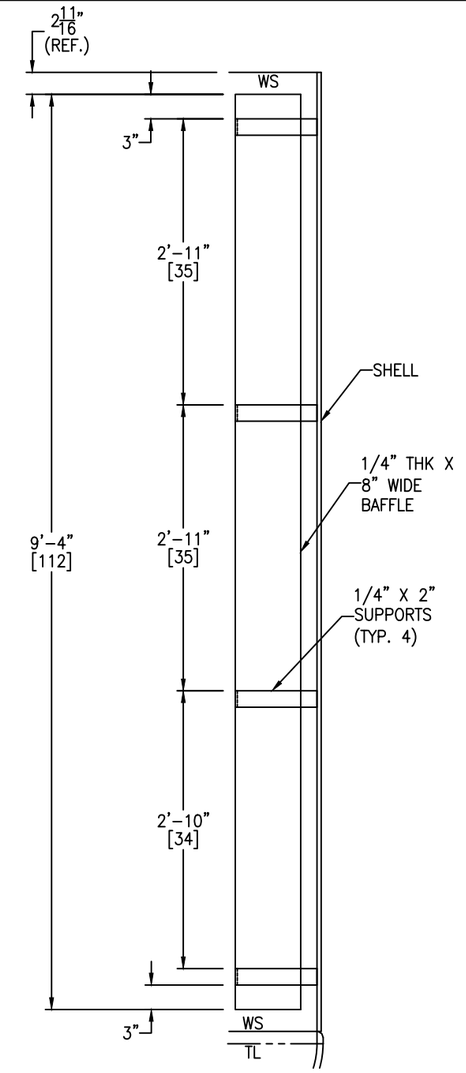

BAFFLE DETAIL

(4 REQ'D) SCALE: 1" = 1'-0"

FC-14

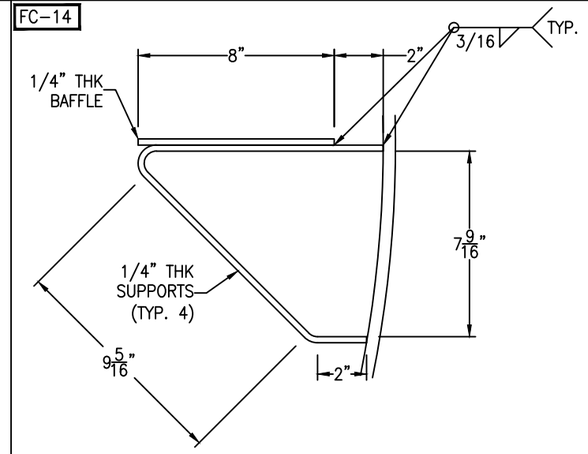

BAFFLE SUPPORT DETAIL

(4 REQ'D) SCALE: 3" = 1'-0"

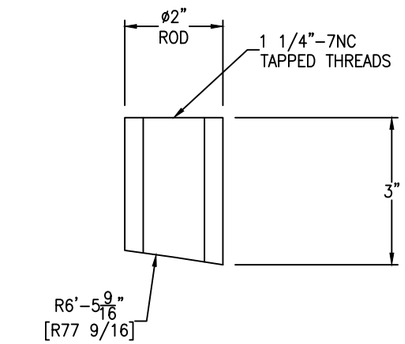

NOZZLE H BOSS DETAIL

(10 REQ'D) SCALE: 6" = 1'-0"

FC-14

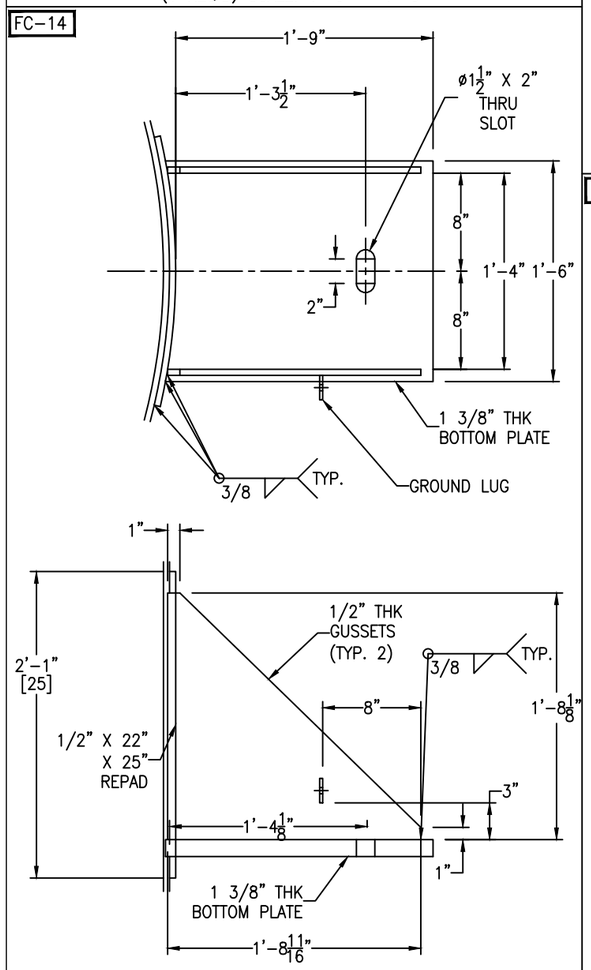

ALIGNMENT HOLES NOT SHOWN FOR CLARITY PURPOSE

SUPPORT LUG DETAIL

(4 REQ'D) SCALE: 1 1/2" = 1'-0"

Bolting for blinds

T1, T2: (4+4) 5/8"-11 NC x 2 1/2" HH BOLT
(4+4) 5/8"-11 NC HH NUT
(1+1) 2" 150# RING GASKET X 1/8" THK

REV	D.BY	C.BY	DATE	DESCRIPTION
				AS BUILT
2	RS	NP	2/26/26	CERTIFIED
1	RS	NP	2/11/26	APPROVAL REV 1
0	AD	RS	1/16/25	APPROVAL

1 REVISIONS

Savannah Tank & Equipment Corp.
1517 Telfair Road, Savannah, GA 31415
(912) 233-8902

DRAWN BY: AD
CHK'D BY: RS
APPROVED BY: NP
SCALE: 1/2" = 1'-0"

SYNTHOMER
EMULSION TANK
EQUIP. #T-11-21-02 1
CUST. PO #4500361508

DRAWING NO.: 356-25-3 SHT 3 OF 4 REV. SET 2

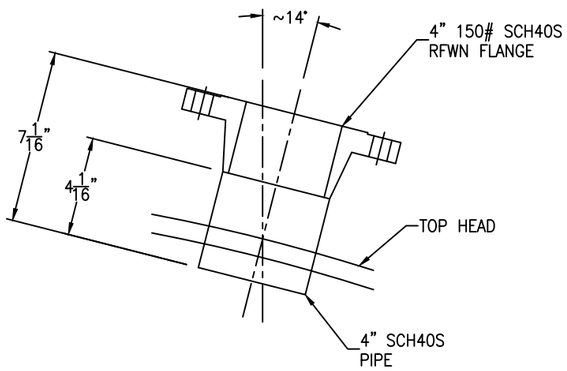

SEE SHT#1 AND SHT #2 FOR ELEVATION AND ORIENTATION

NOZZLE F DETAIL

SCALE: 3" = 1'-0"

FC-14

*NOTE: SEE SHT#2 FOR HINGE LOCATION AND SEE SHT#1 FOR MANWAY ELEVATION

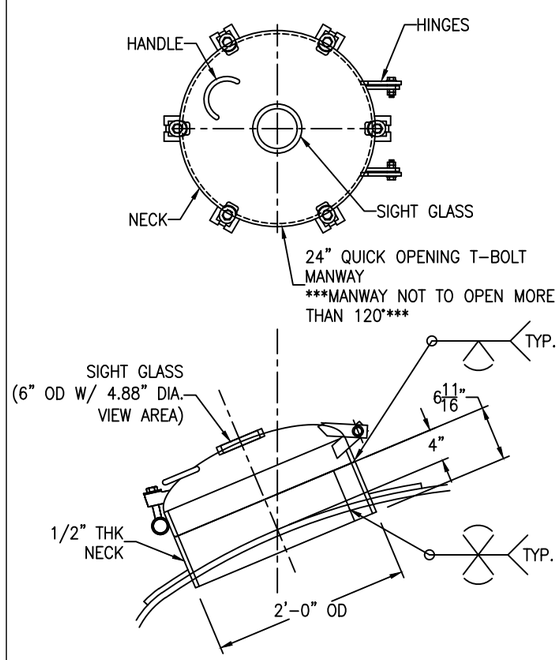

NOZZLE A DETAIL

SCALE: 1" = 1'-0"

REV	D.BY	C.BY	DATE	DESCRIPTION
				AS BUILT
2	RS	NP	2/26/26	CERTIFIED
1	RS	NP	2/11/26	APPROVAL REV 1
0	AD	RS	1/16/25	APPROVAL

⚠ REVISIONS

Savannah Tank & Equipment Corp.
1517 Telfair Road, Savannah, GA 31415
(912) 233-8902

DRAWN BY: AD
CHK'D BY: RS
APPROVED BY: NP
SCALE: 1/2" = 1'-0"

SYNTHOMER
EMULSION TANK
EQUIP. #T-11-21-02
CUST. PO #4500361508

DRAWING NO.: 356-25-4 SHT 4 OF 4 REV. SET 2